Partdrawing for DEBWST06 - WST06 1

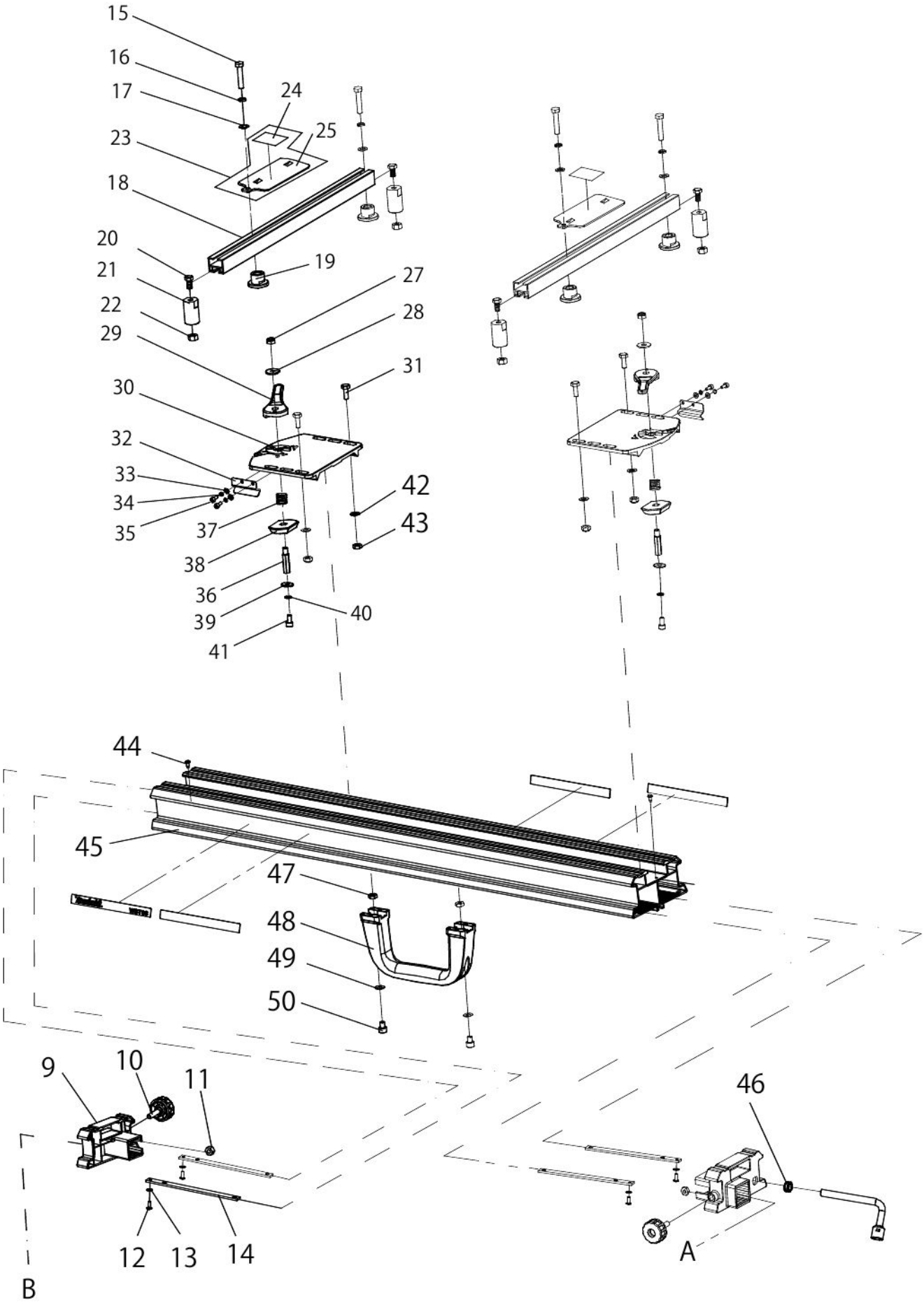
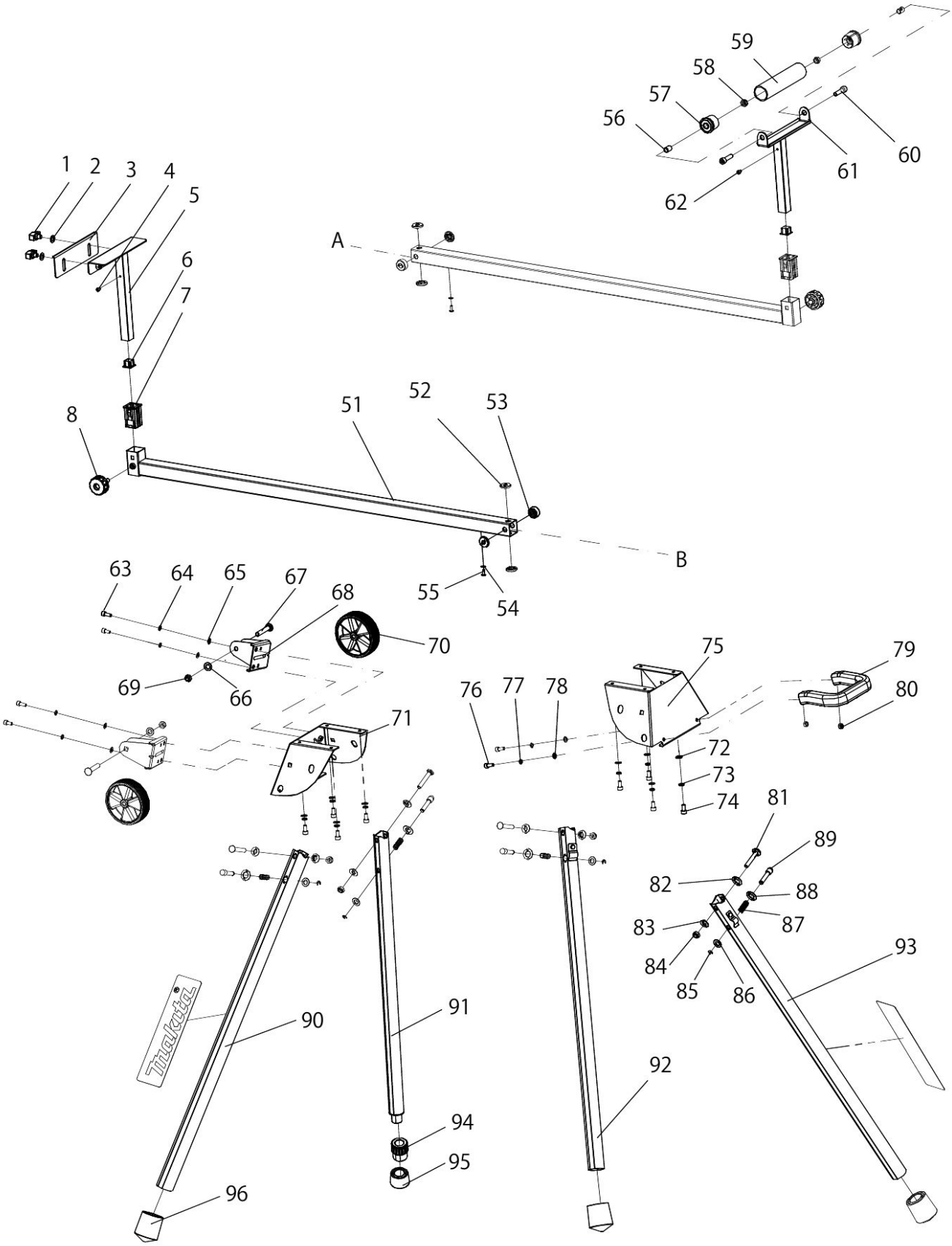
Partdrawing for DEBWST06 - WST06 2