Partdrawing for BO4901 - Vlakschuurmachine
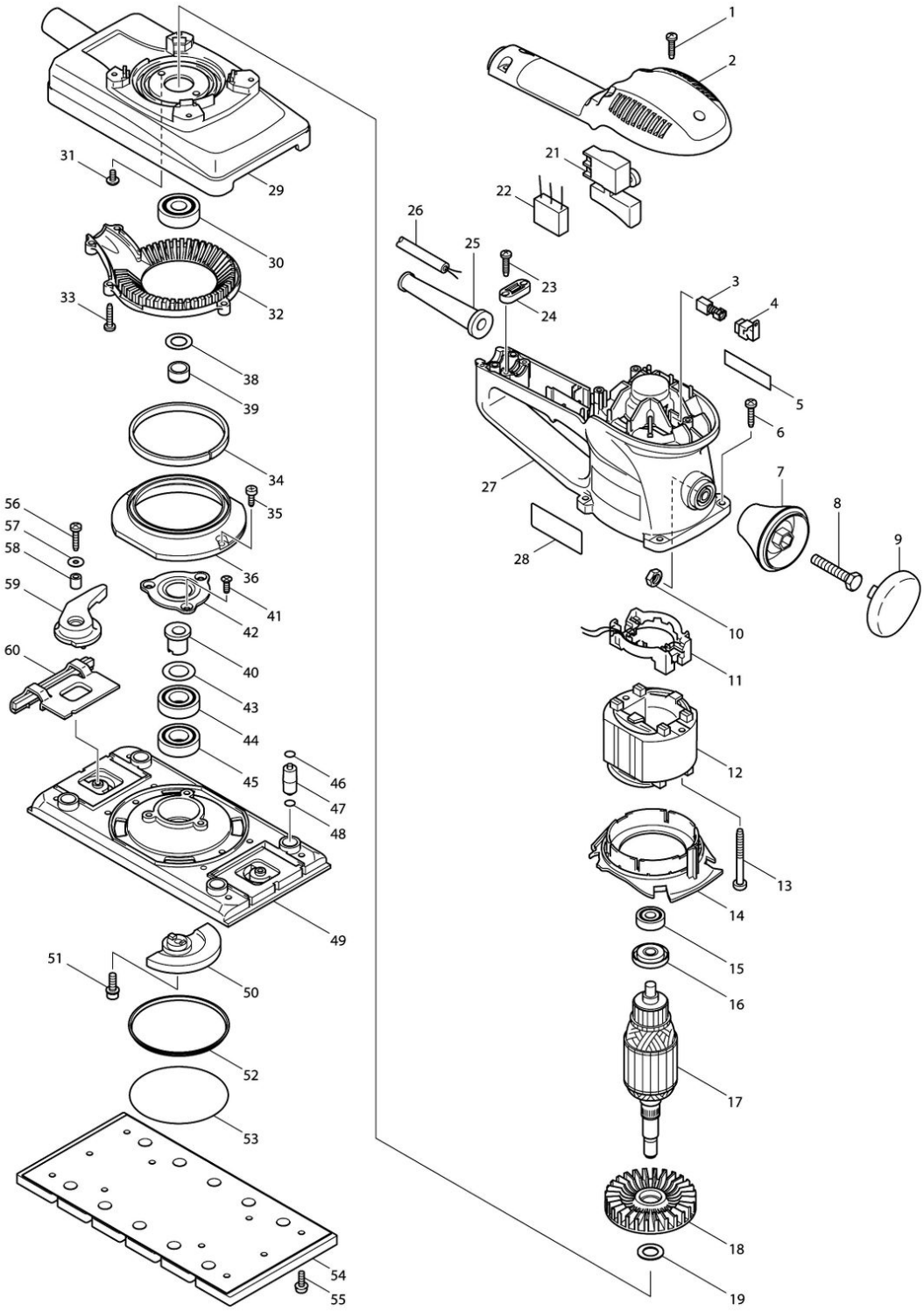
Model No.BO4901 FINISHING SANDER