Partdrawing for LS002GD202 - Pagina 1

Model No.LS002G 216MM DC SLIDE CPD. MITER SAW

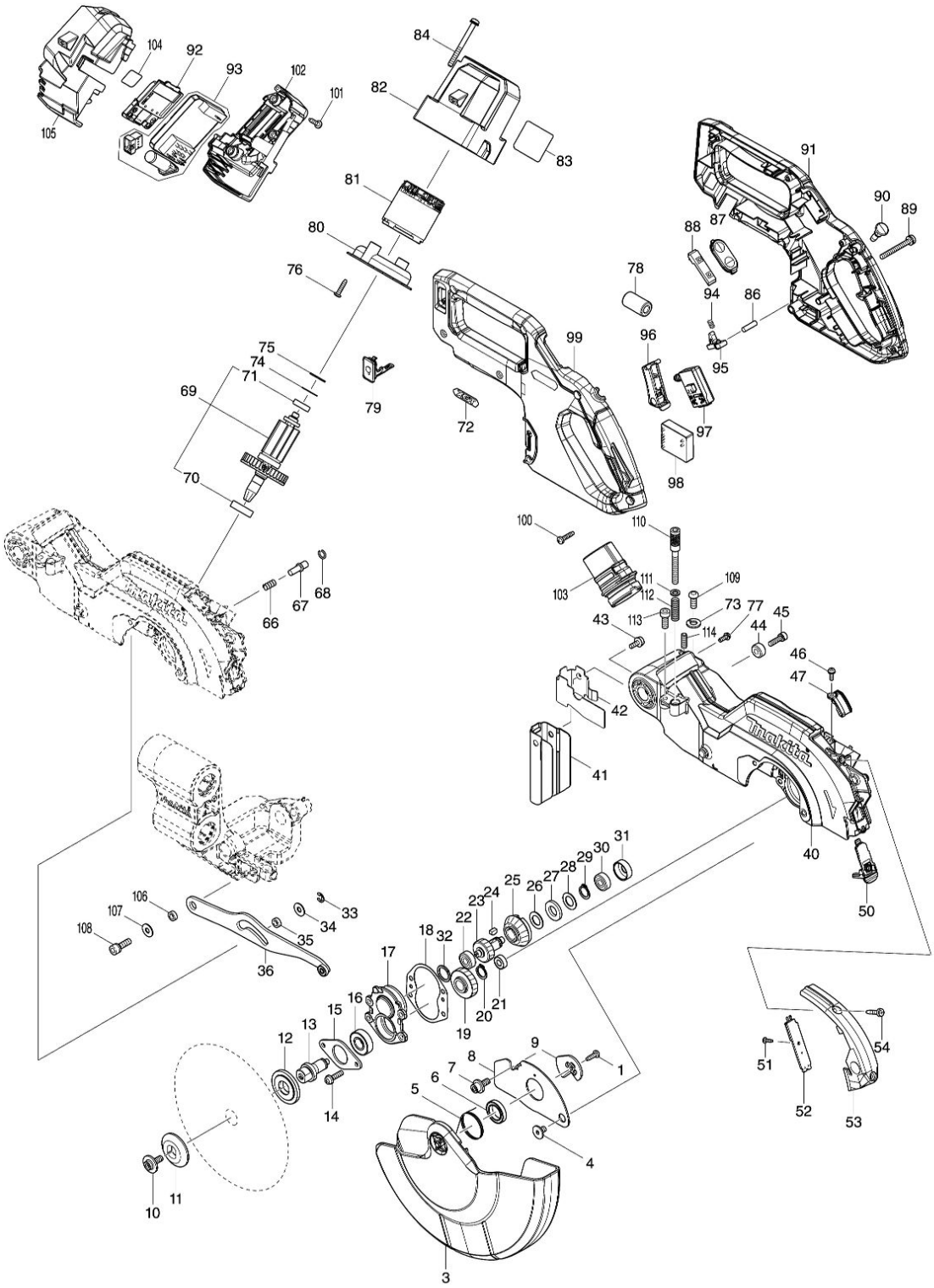
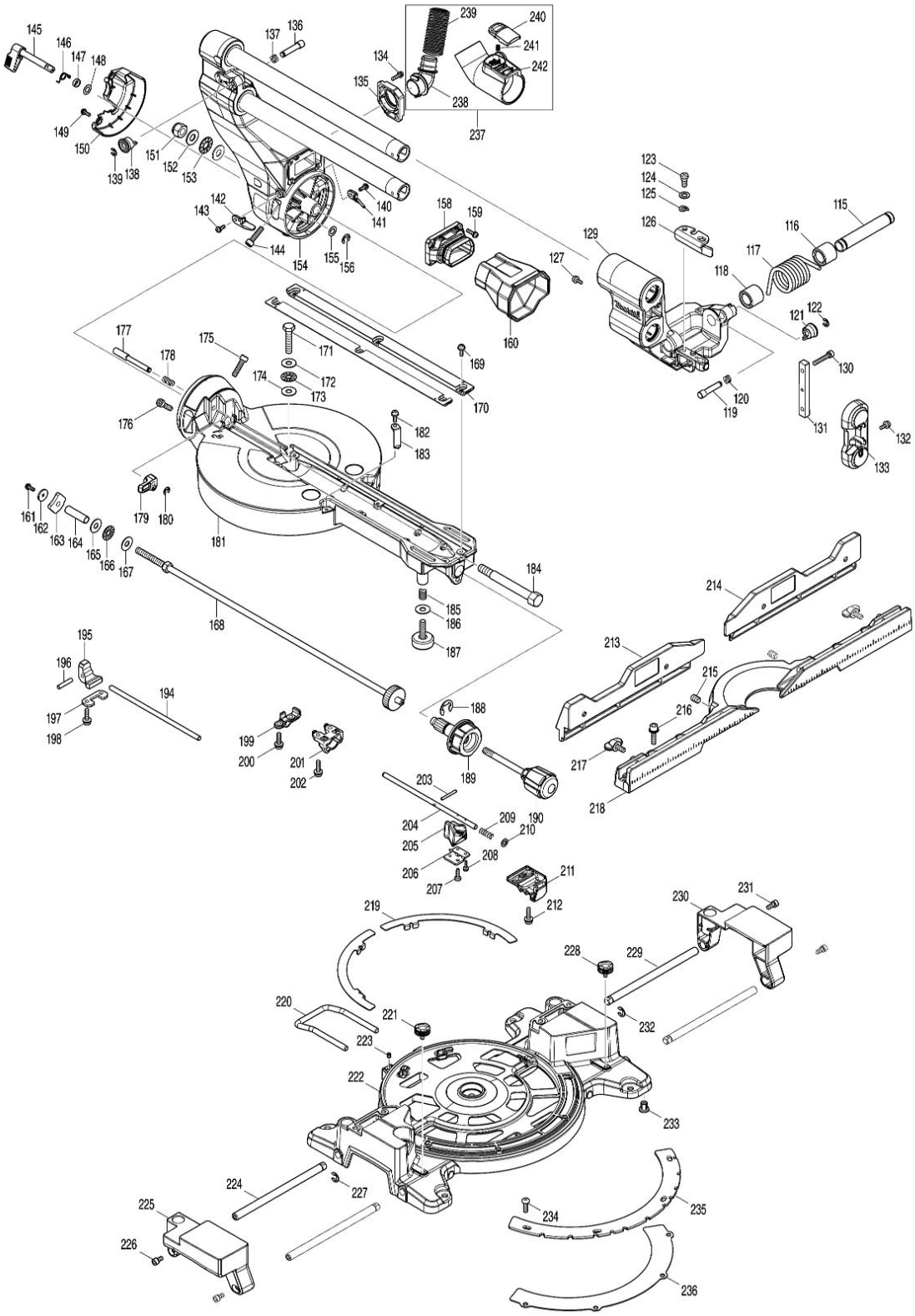
Model No.LS002G 216MM DC SLIDE CPD. MITER SAW