Partdrawing for DMP180RT - Luchtpomp

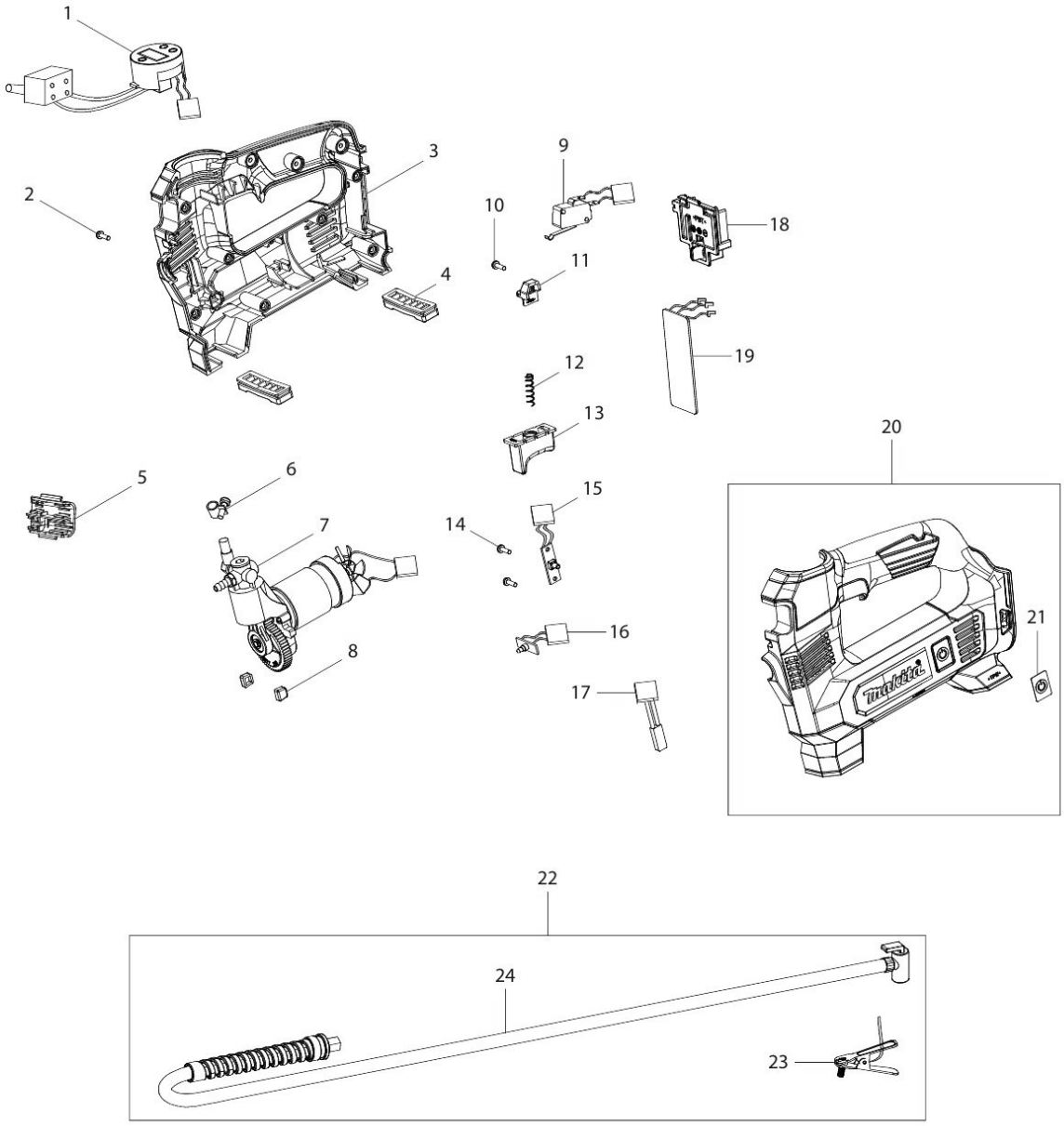

2019/10
DMP180