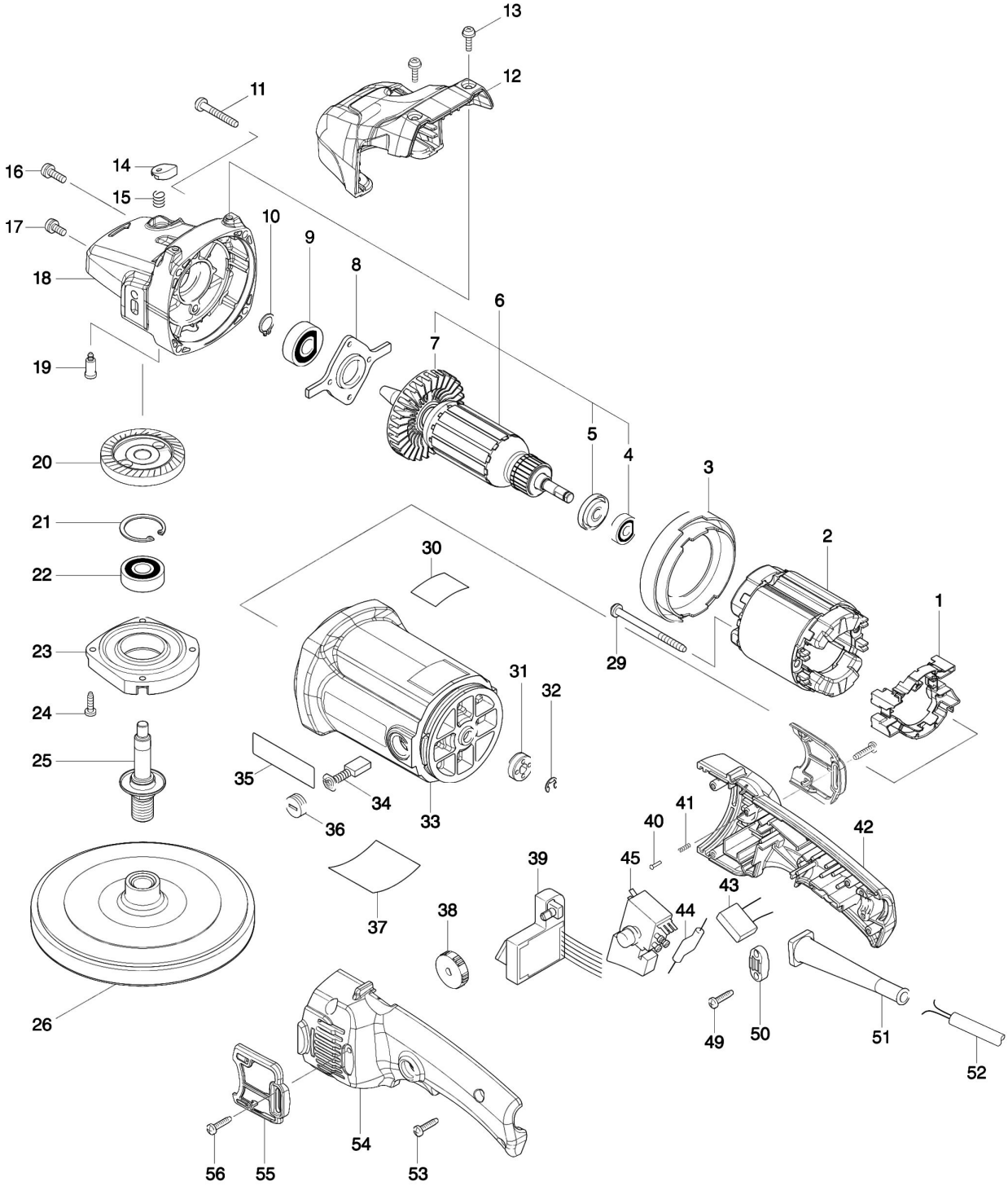Partdrawing for 9237CB - Schuur-/poetsmachine