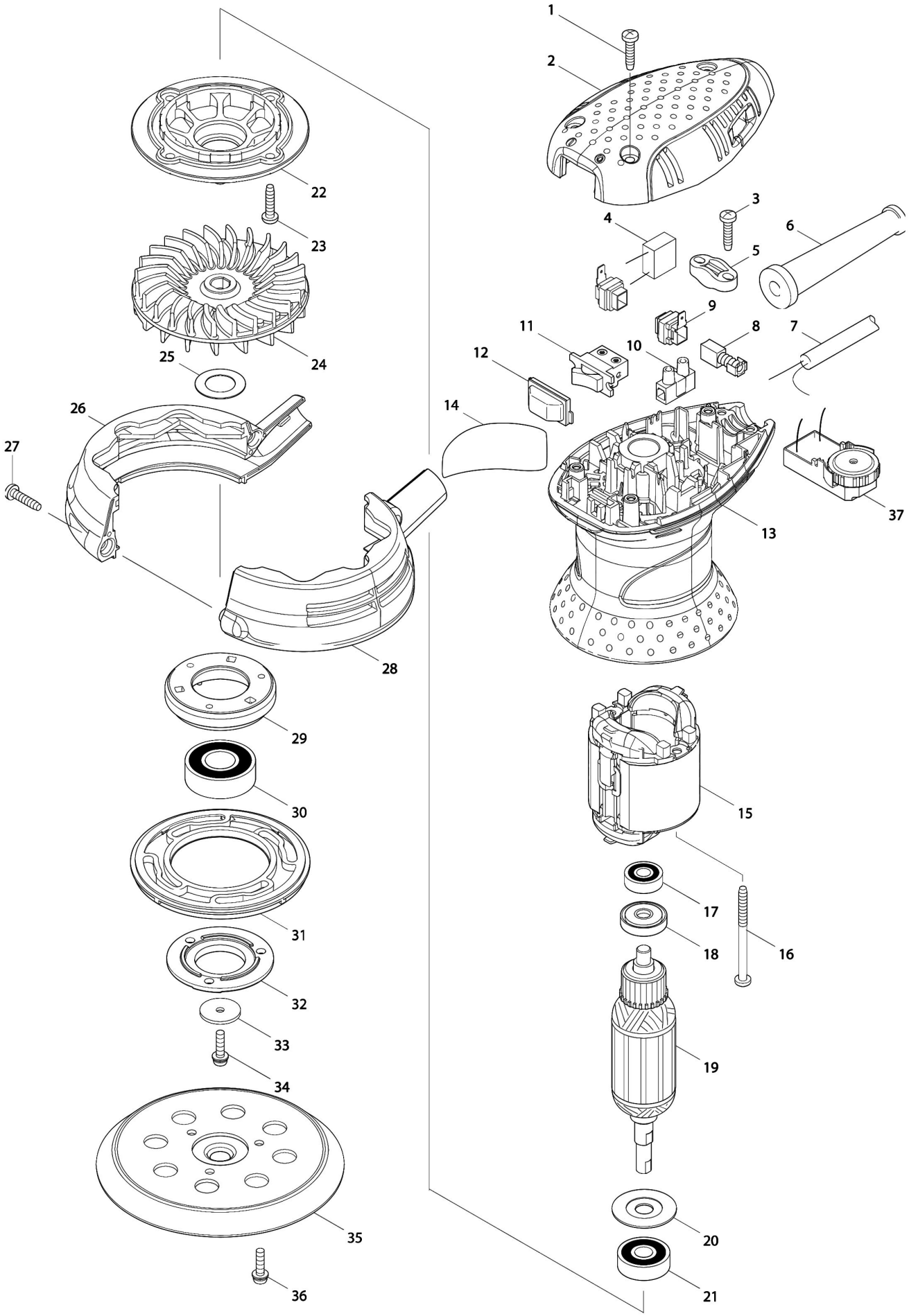Partdrawing for BO5031K - Excenter schuurmachine