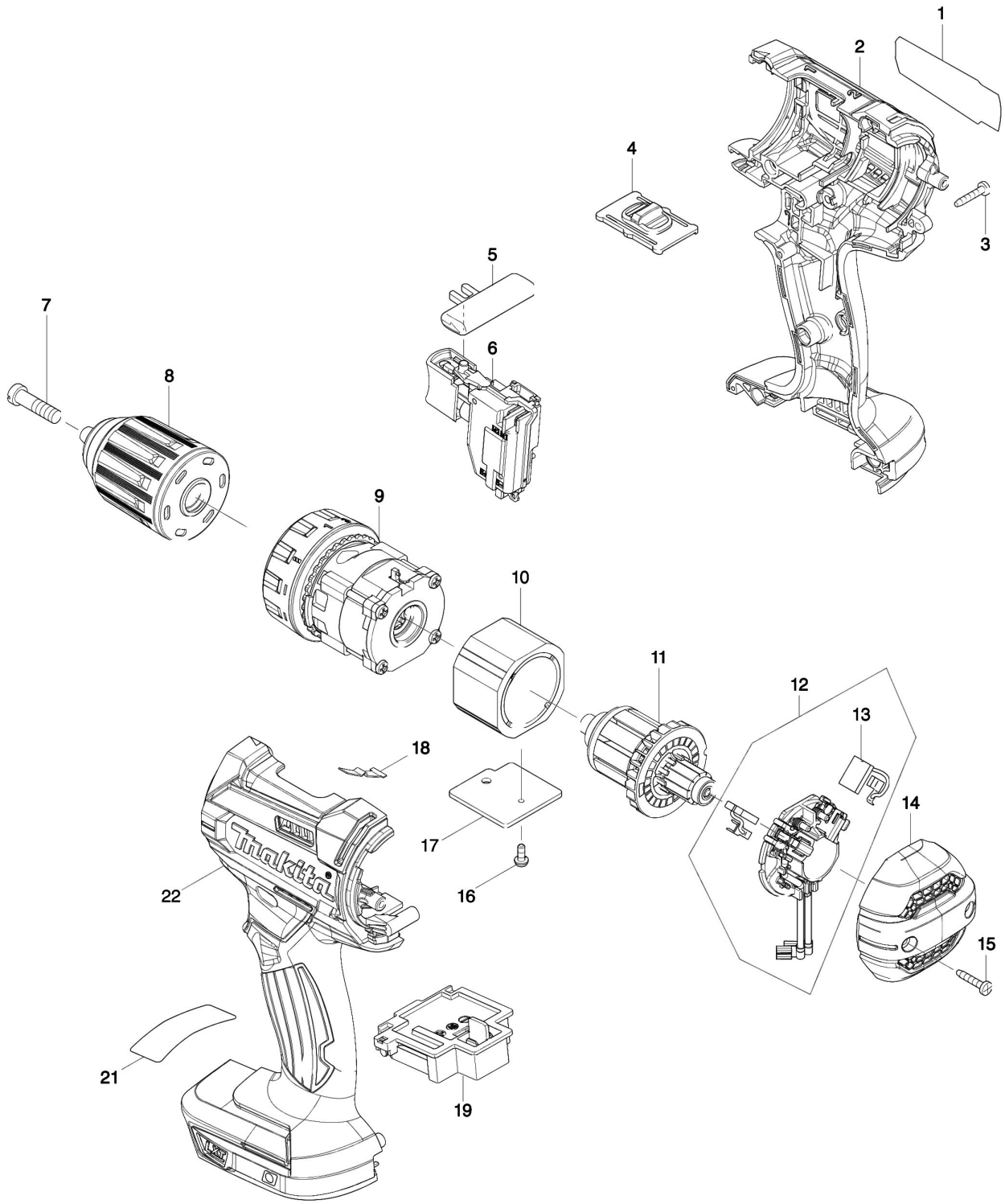Partdrawing for DDF482ZJ - Boor-/schroefmachine