Partdrawing for PF0800 - Dompelpomp

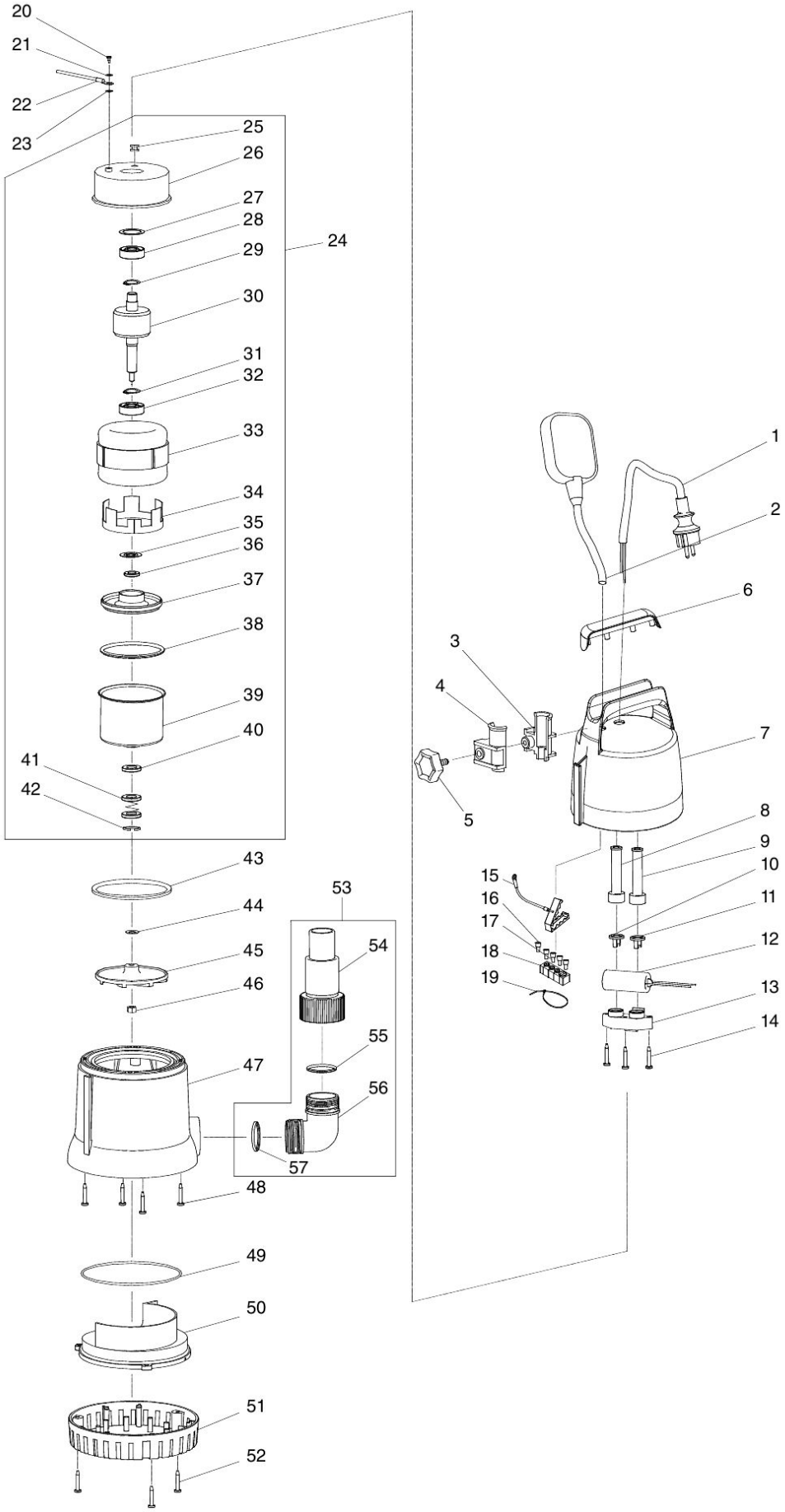

2018/05
PF0800