Partdrawing for PF1100 - Dompelpomp

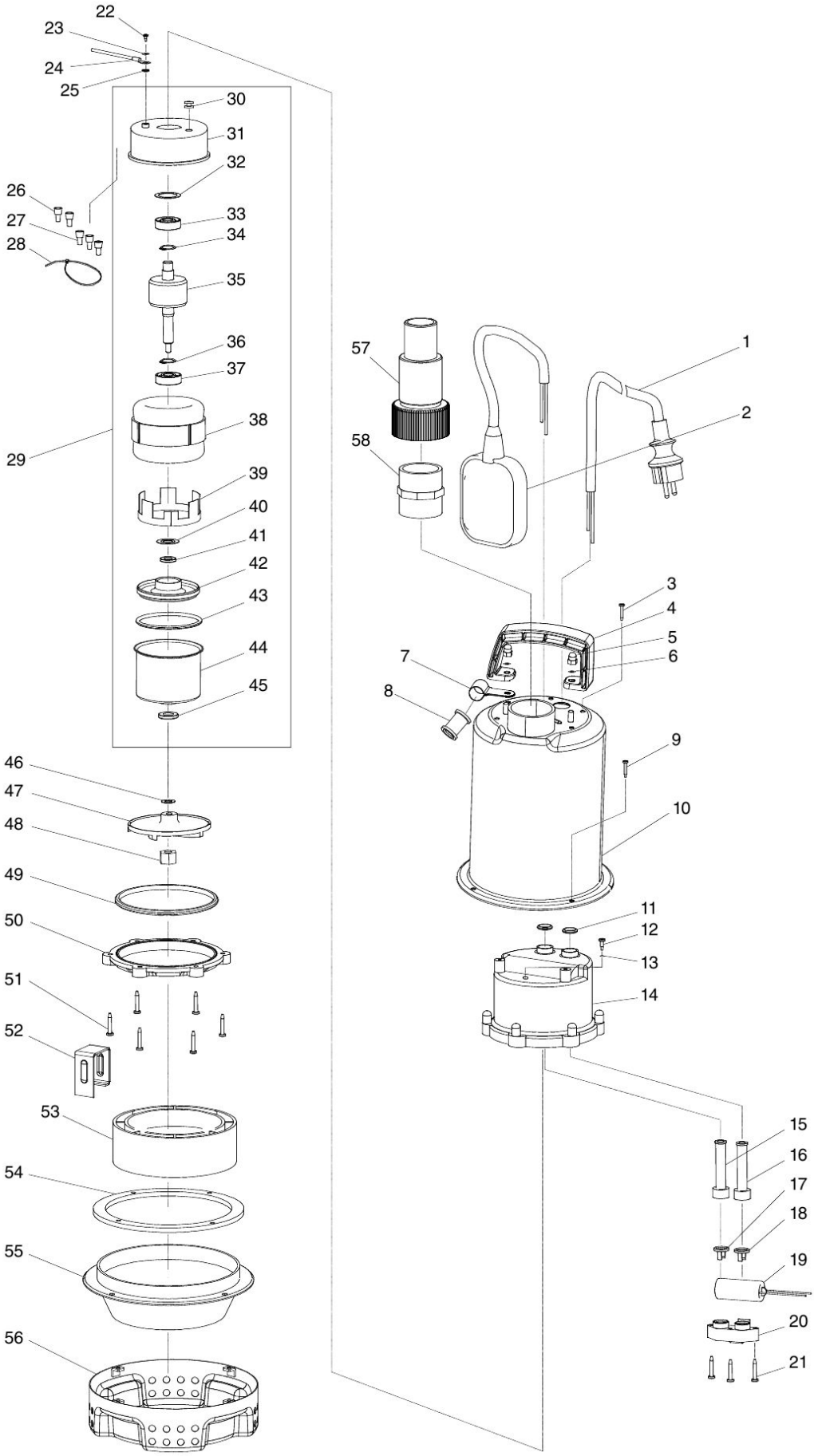

2017/10
PF1100